Eco-King

www.kingheatingproducts.com

Ultimate 299, 399 and 499

High efficient Condensing Volume Water Heater

Submittal Sheet

Job Name: _____ ***Date:*** _____

Location: _____

Engineer: _____

Contractor: _____

Model Number: _____ ***Gas Type:*** _____

Product Features:

- Certified to ANSI Z21.13/CSA 4.9-2017 gas-fired boiler standard
- SA240-S43932 Stainless Steel Heat Exchanger
- ASME "HLW" stamped boiler designed and constructed in compliance with the ASME Boiler and Pressure vessel code Section IV
- CSD-1 compliant, low NOx operation and direct spark ignition
- Fully modulating burner, 6 to 1 turndown ratio
- Vents via 3 in 1 included adapter: CPVC, PVC, PP or Stainless Steel
- Convertible from NG to LP (field replaceable orifice required)
- Direct vent sealed combustion or indoor intake air compatible
- Max operation pressure and temp: 80psi and 160°F
- **Maximum vent lengths: 228' per side on a CHB 299, 605' on a CHB 499**
- Cascade venting approved in Canada

Control Features:

Manual Reset High Limit (CSD-1)

Manual Reset LWCO (CSD-1)

External Alarm connection

Domestic hot water priority via tank sensor or aquastat

Outdoor reset & Cascade up to 16 units

Freeze protection and Time and Date input

3 circulator outputs

Two temp output: one for DHW and one for CH

Integrated Modbus RTU for connection to BMS gateways

Integrated 0-10v connection, error history with time & date

Included Items: 125psi ASME relief valve

Optional Features: Wifi control with mobile app and extra accessory, Racking systems for 1,2, 3 or 4 boilers with or without low loss header

Model	Water Connections Inlet & Outlet	Gas Connection NPT, inches	Exhaust / air-intake Pipe diam. inches	Max Vent length per side, ft / Total combined length	Approx weight empty, lbs	Water content, usg
HWB 299	1 1/2"	1"	4"	228' / 456'	79	6.7
HWB 399	1 1/2"	1"	4"	121' / 242'	83	8.3
HWB 499	1 1/2"	1"	6"	605' / 1210'	85	10.4

Model	Input Modulation MBH	Gross Output Capacity MBH	Recovery Rate gal/hr	Thermal Efficiency %
299	59-295	274	319	96.8%
399	80-396	378	428	95.6%
499	98-474	453	513	97.4%

Performance Specs

King Heating Products Inc
UNit103-2567 192 St.
Surrey, BC V3Z 3X1
(604) 385-3265
www.kingheatingproducts.com

ENERGY STAR

c LC us

ASME HLW

AHRI CERTIFIED www.ahridirectory.org

Boiler Dimensions:

ECO-KING

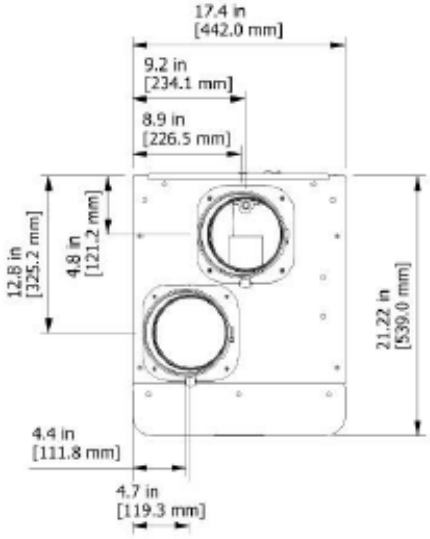

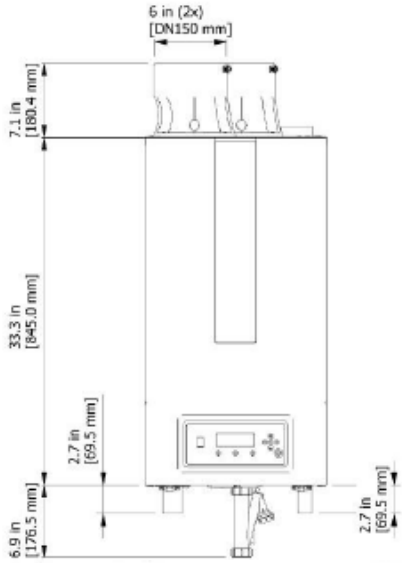

Pump Sizing Chart

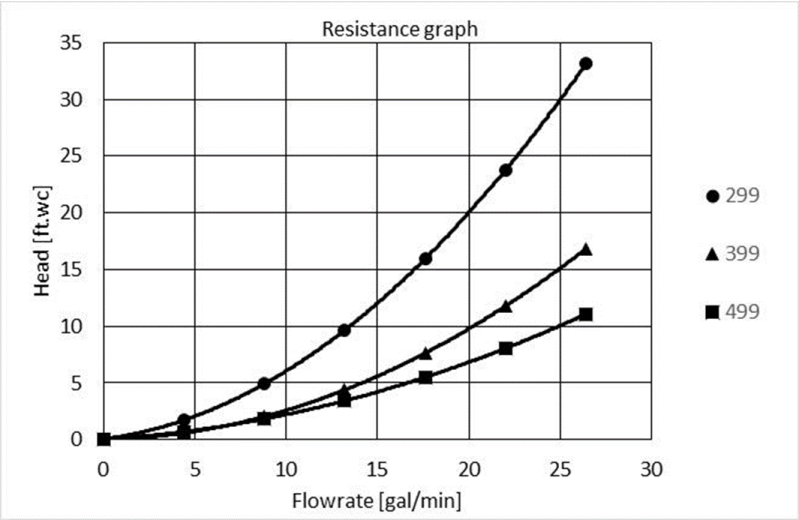

Boiler Efficiency Chart

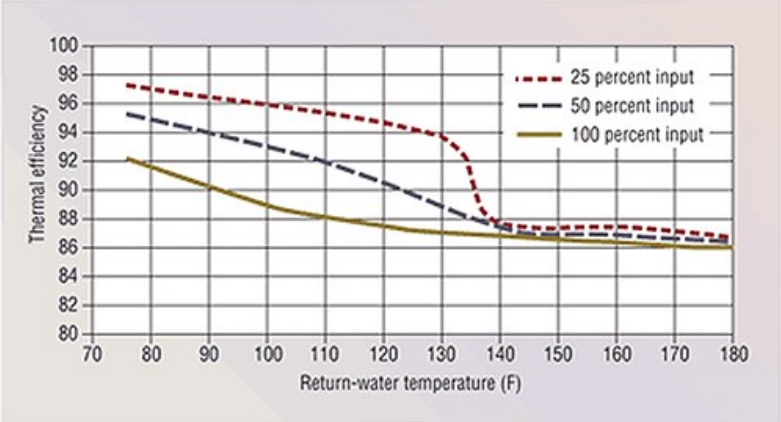

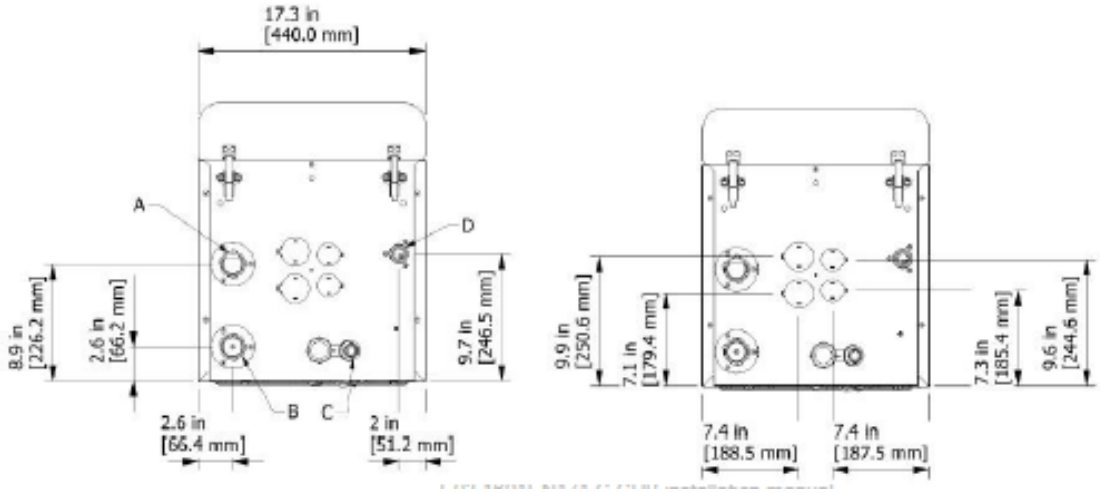

For more information visit:

www.kingheatingproducts.com

ECO-KING

Electrical Connections:

LOW VOLTAGE CONNECTIONS

29	28	27	26	25	24	23	22	21	20	19	18	17	16	15	14	13	12	11	10	9	8	7	6	5	4	3	2	1
						-	+	-	+	Gnd				-	+			-	+	B	A	Gnd						
Safety switch 2 Interrupteur de sécurité 2		Safety switch 1 Interrupteur de sécurité 1		Gas pressure switch Interrupteur de pression de gaz		LWCO Extern Eau basse coupée à l'extérieur		AL-BUS managing boiler AL-BUS chaudière gérant		DO NOT USE NE PAS UTI-LISER		Flow switch DHW Interrupteur de débit ECS		DO NOT USE NE PAS UTI-LISER		DO NOT USE NE PAS UTI-LISER		AL-BUS depending boiler AL-BUS chaudière dépendant		Modbus			DHW sensor Capteur ECS		System sensor Capteur de systéme		DO NOT USE NE PAS UTI-LISER	

HIGH VOLTAGE CONNECTIONS

	1	2	3	PE	4	5	PE	6	7	PE	8	9	PE	PE	10	11
	L1	N	L2	PE	L	N	PE	L	N	PE	L	N	PE	PE	L	N
MAXIMUM TOTAL OUTPUT 3.5 Amps NOMINAL	DO NOT USE NE PAS UTILISER				DO NOT USE NE PAS UTILISER			GENERAL PUMP Pompe générale MAX 2 Amps			MAINS SUPPLY Alimentation secteur				ALARM Alarme MAX 50W	

Minimum and maximum allowable combined vent and air inlet length:

- Minimum venting length: two feet (2 ft) for all water heaters
- Maximum venting length: see table below.

Venting Lengths:

Maximum Exhaust Length / Maximum Combustion Air Intake Length			
	HWB-299	HWB-399	HWB-499
4"	228' / 228'	121' / 121'	92' / 92'
5"			359' / 359'
6"			605' / 605'

Cascade Vent Options:

CALCULATION HWB (VALID FOR PARTS SUPPLIED BY DURAVENT (M&G)).

Maximum vertical length in feet (m).					
Type of boiler	Number of appliances	DN150	DN150/200	DN200	DN200/300
HWB-299	3	100 ft (30 m)	100 ft (30 m)	100 ft (30 m)	100 ft (30 m)
	4	36 ft (11 m)	100 ft (30 m)	100 ft (30 m)	100 ft (30 m)
	5		100 ft (30 m)	100 ft (30 m)	100 ft (30 m)
	6		16 ft (5 m)	100 ft (30 m)	100 ft (30 m)
HWB-399	3	85 ft (26 m)	100 ft (30 m)	100 ft (30 m)	100 ft (30 m)
	4		100 ft (30 m)	100 ft (30 m)	100 ft (30 m)
	5		16 ft (5 m)	100 ft (30 m)	100 ft (30 m)
	6			100 ft (30 m)	100 ft (30 m)
HWB-499	3		100 ft (30 m)	100 ft (30 m)	100 ft (30 m)
	4		65 ft (20 m)	100 ft (30 m)	100 ft (30 m)
	5			20 ft (6 m)	100 ft (30 m)
	6				100 ft (30 m)